POWER MIRRORS

Component Index

Driver Door Module (DDM)
Front Passenger Door Module (FPDM)
Fuse Block-Rear
HVAC Control Module
Outside Rearview Mirror Switch
Outside Rearview Mirror-Driver
Outside Rearview Mirror-Passenger

POWER MIRRORS

Circuit Schematic

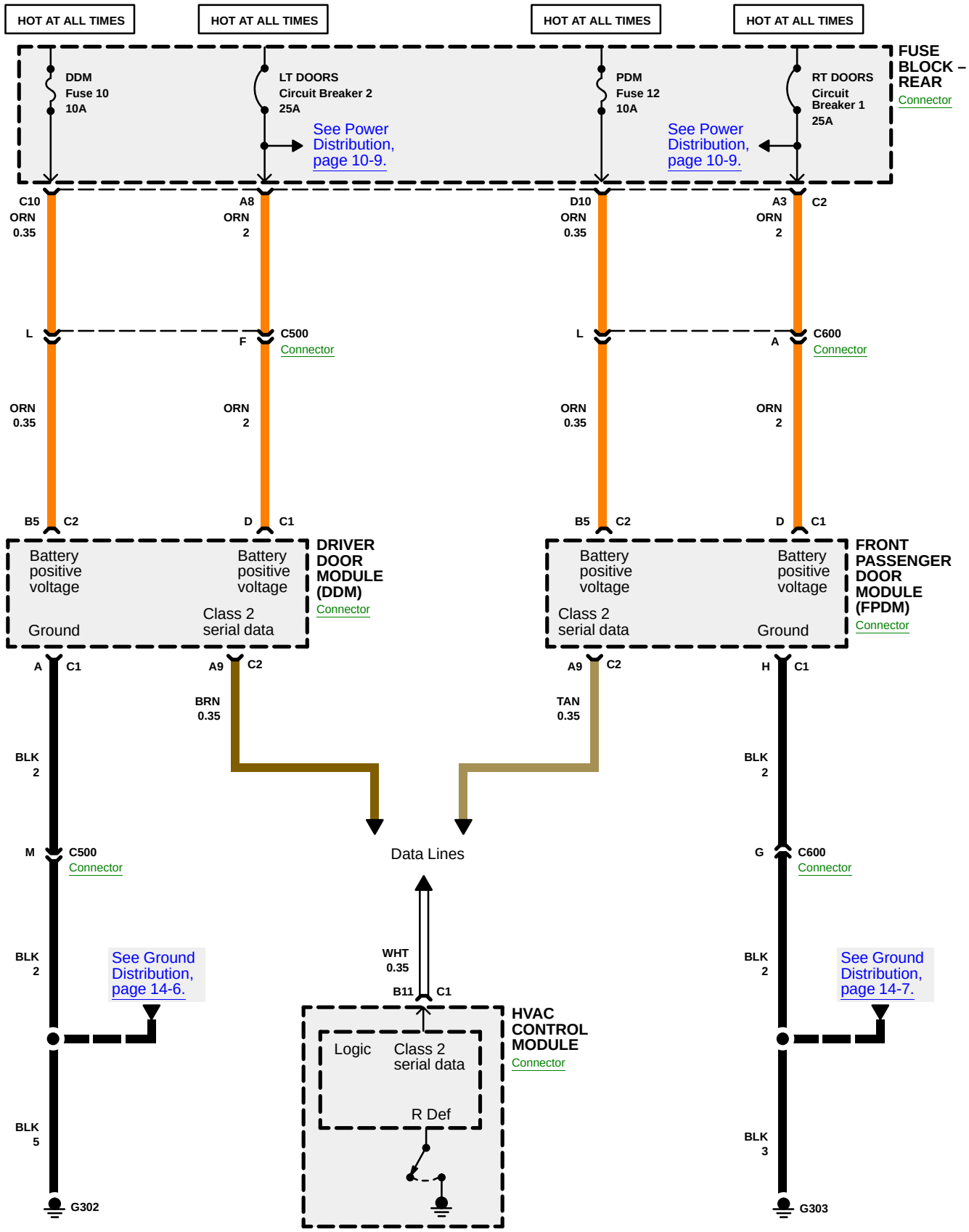

POWER MIRRORS

Circuit Schematic

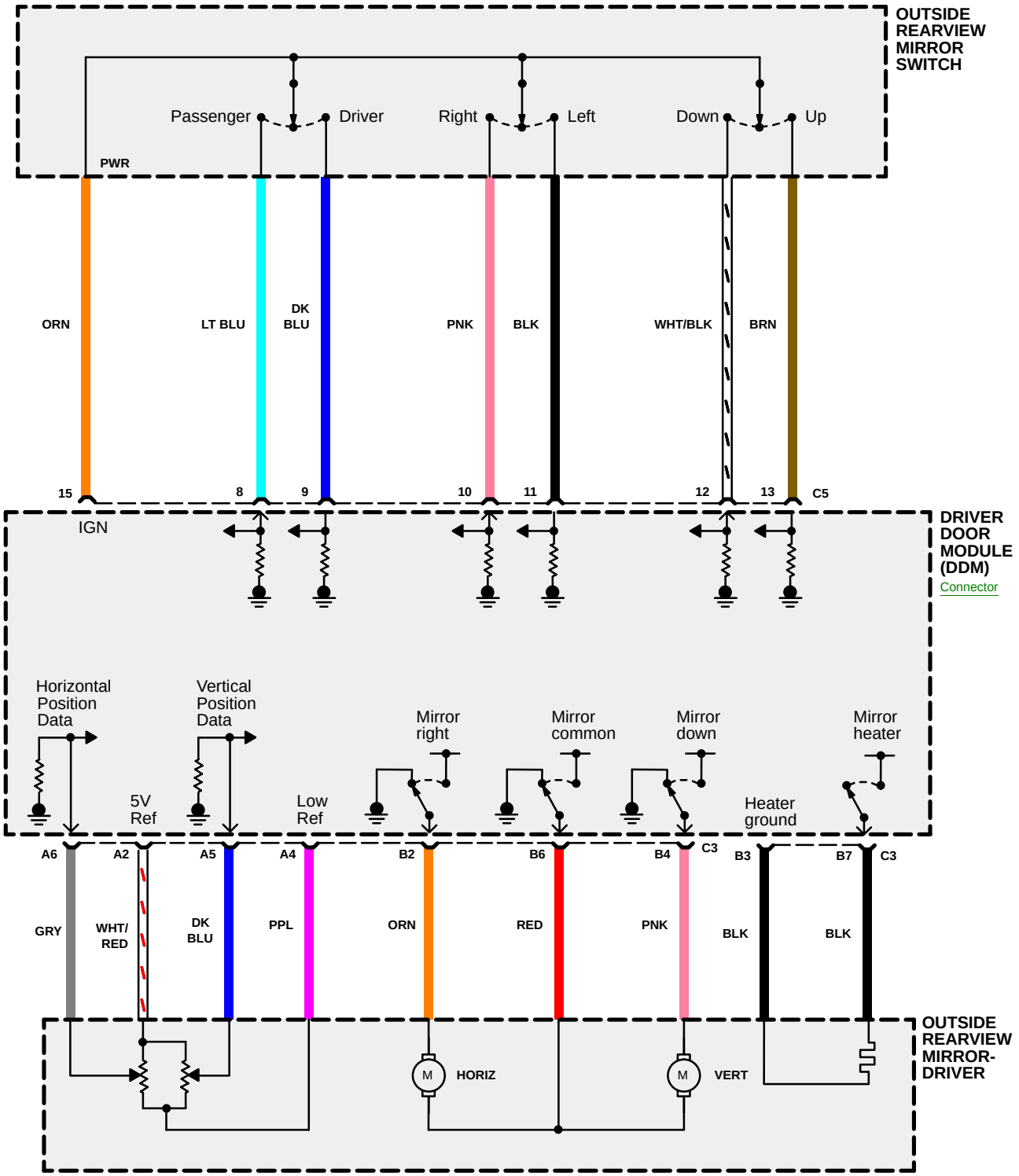

POWER MIRRORS

Circuit Schematic

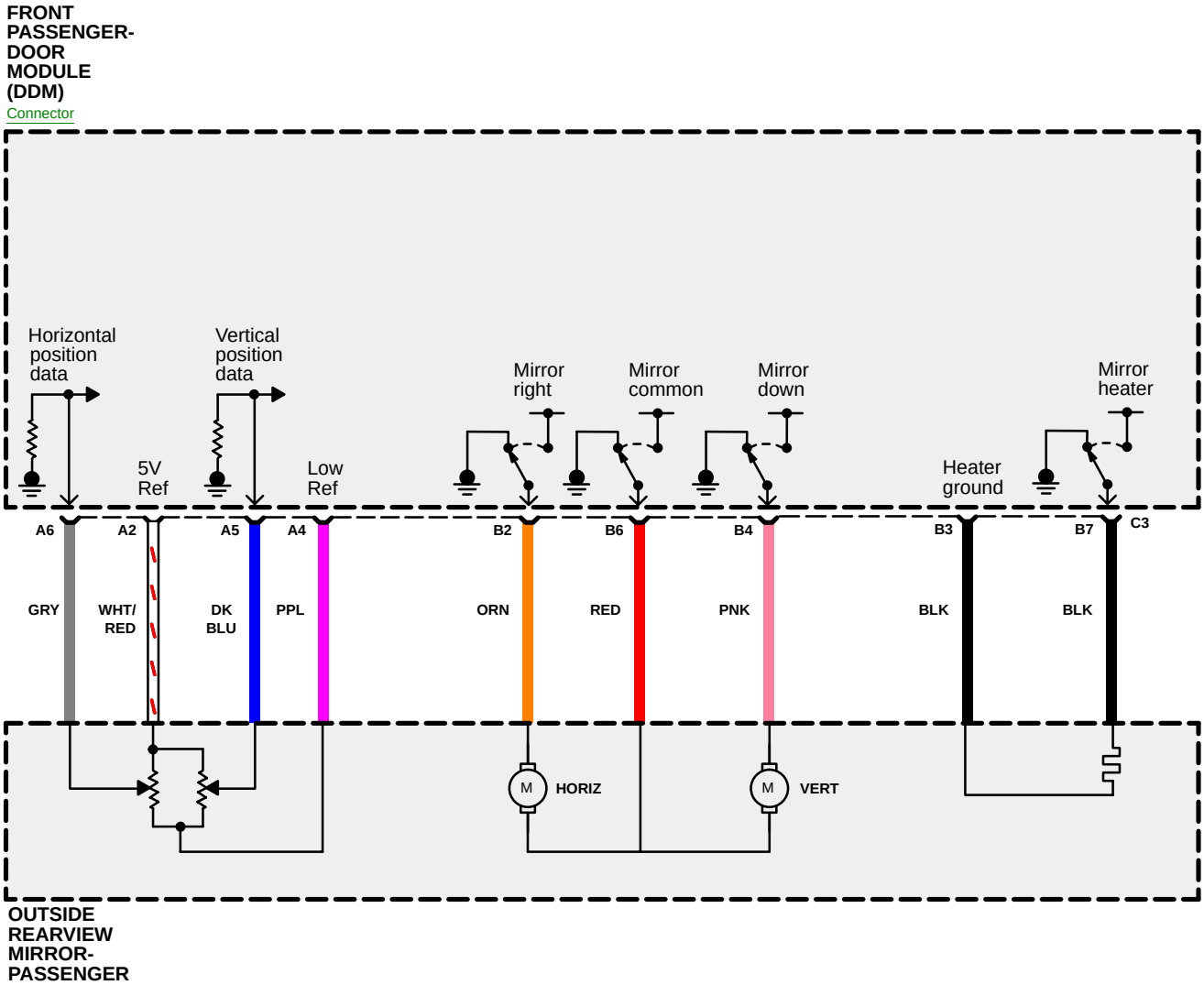

POWER MIRRORS

Circuit Operation

The power mirror switch receives power from the DDM through the battery supply voltage circuit and the DDM fuse. The left and right mirror positions of the select switch and four positions of the direction switch, when active, will provide a battery voltage signal to the DDM through their respective signal circuits. If the selector switch is placed in the L position and the up switch is depressed, a battery voltage signal will be supplied to the DDM through the driver mirror select switch signal and the mirror motor up switch signal circuits. The DDM upon receipt of these signals will provide battery voltage to the mirror motor left/up control circuit and ground to the mirror motor down control circuit and the mirror will move up. The remainder of the driver mirror functions operate in the same manner as described above except the DDM will supply battery voltage and ground to the appropriate control circuits for the direction selected. If the passenger mirror is selected and a direction switch is activated, the DDM sends a class 2 message to the PDM indicating that the passenger mirror was selected and the direction to be commanded. The PDM will then supply battery voltage and ground to the appropriate control circuits for the direction selected.

POWER MIRRORS

Component Location Index

(Refer to Section 201 for photographs.)

Component		Photo No.
Driver Door Module (DDM)	On lower part of the driver door switch panel	95
Front Passenger Door Module (FPDM)	On lower part of passenger door switch panel	96
Fuse Block-Rear	Under the left rear seat	52
HVAC Control Module	In the IP center trim panel, beneath the radio	75
Outside Rearview Mirror Switch	On driver's door	95
Connector		
C500 (12-BLK)	Midpoint of leading edge of left front door	93
C600 (12-BLK)	Midpoint of leading edge of right front door	93
Ground		
G302	On the lower left B-pillar	105
G303	On the lower right B-pillar	105